SEVERE DUTY & RECYCLING

TARP SYSTEMS

US Tarp
Covering America®

800-249-0297 | USTARP.COM

SEVERE DUTY PARTS - SYSTEMS AND ASSEMBLIES

PART #	RATED TO:	DESCRIPTION
SEVERE DUTY SYSTEMS*		
16518*	40'	12-Spring Severe Duty System with Two-Piece Arms and 16' Uppers
16502*	48'	16-Spring Severe Duty System with Two-Piece Arms and 16' Uppers
16517*	48'	16-Spring Severe Duty System with 24' HD Bulletproof Arms
16516*	54'	16-Spring Severe Duty System with Two-Piece Arms and 22' Uppers
SEVERE DUTY SPRING ASSEMBLIES		
16473	40'	12-Spring Underbody Assembly for Two-Piece Arm; Driver Side
16474	40'	12-Spring Underbody Assembly for Two-Piece Arm; Passenger Side
16485-HD	48'	16-Spring Underbody Assembly for HD Bulletproof; Driver Side
16486-HD	48'	16-Spring Underbody Assembly for HD Bulletproof; Passenger Side
16469-HD	54'	16-Spring HD Underbody Assembly for Two-Piece Arm; Driver Side
16470-HD	54'	16-Spring HD Underbody Assembly for Two-Piece Arm; Passenger Side
SEVERE DUTY ARM KITS**		
16476	40'	12-Spring Severe Duty Underbody Arm Kit with Two-Piece Lowers & 16' Uppers
16527	48'	16-Spring Severe Duty Underbody Arm Kit with Two-Piece Lowers & 16' Uppers
16522	48'	16-Spring Severe Duty Underbody Arm Kit with 24' HD Bulletproof Arms
16475	54'	16-Spring Severe Duty Underbody Arm Kit with Two-Piece Lowers & 22' Uppers
SEVERE DUTY ARM HOLD DOWN KITS		
16599	-	Arm Restraint Kit for Two-Piece Arm Kits with Cable
16505	-	Arm strap Kit for Two-Piece Arm Kits with 1" Strapping
16602	-	Arm Restrain Kit for HD Bulletproof Arm Kits with Cable
16519	-	Arm Strap Kit for HD Bulletproof Arms with 1" Strapping

*Assembled Scrap Hauler Housing for 102" Body
**Arm Kits do not include Arm Hold Down Kits

Tarp Options

All Tarp Options Available in the US Tarp Parts Catalog.

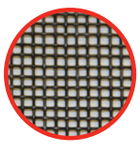

BLACK MESH & MULTI-COLOR MESH
The industry standard cargo control mesh. Medium weight, PVC-coated polyester recommended for rock, sand, gravel, and brush.

MONSTER MESH
Heavyweight tightly woven mesh with 50% more threads than our HD. PVC-coated polyester. Perfect for refuse and storm clean-up applications.

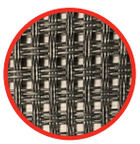

ARMOR MESH
Severe duty block woven 5x5 PVC-coated polyester mesh. Provides outstanding performance in recycling, refuse, demo, and storm clean-up applications.

SEVERE DUTY PARTS - SYSTEMS AND ASSEMBLIES

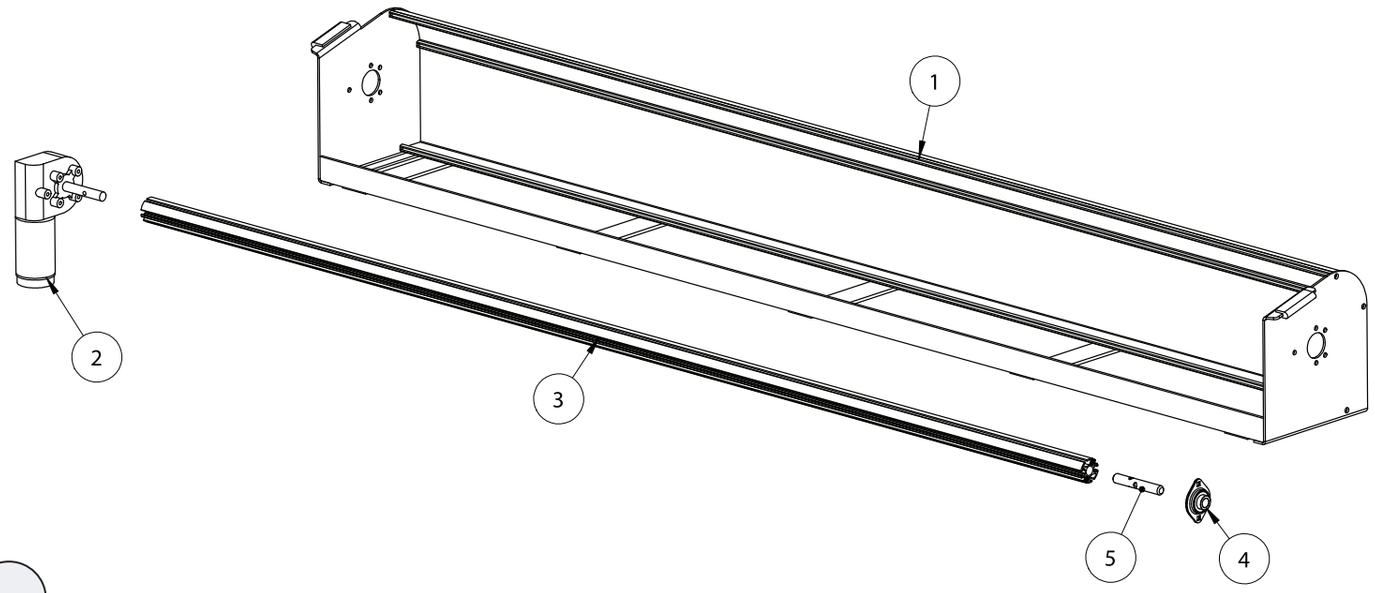

REF.	QTY	PART #	DESCRIPTION
102" SCRAP HAULER ASSEMBLY			
1	1	15089	Scrap Hauler Housing
2	1	15938	90:1 HD Bulletproof Tarp Motor
3	1	11200	Tarp Axle, 101-5/8"
4	1	11139	3/4" Stamped Steel Flange Bearing C.D.
5	1	11201	Spool Shaft 5"

HD Bulletproof, 1-Piece Arm

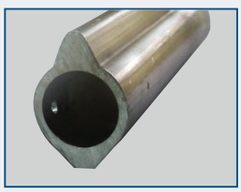

Part #14748

Severe Duty, 2-Piece Arm

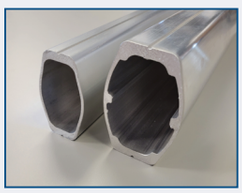

Lower Part #16560
Upper Part #16559

Heavy Duty Axle

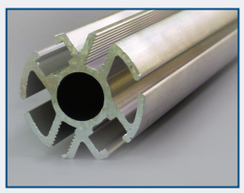

Part #11200

HD Bulletproof Tarp Motor (90:1)

Part #15938

**Item not shown. *Oversized items, over length shipping rates apply.

SEVERE DUTY PARTS - ONE PIECE SYSTEM

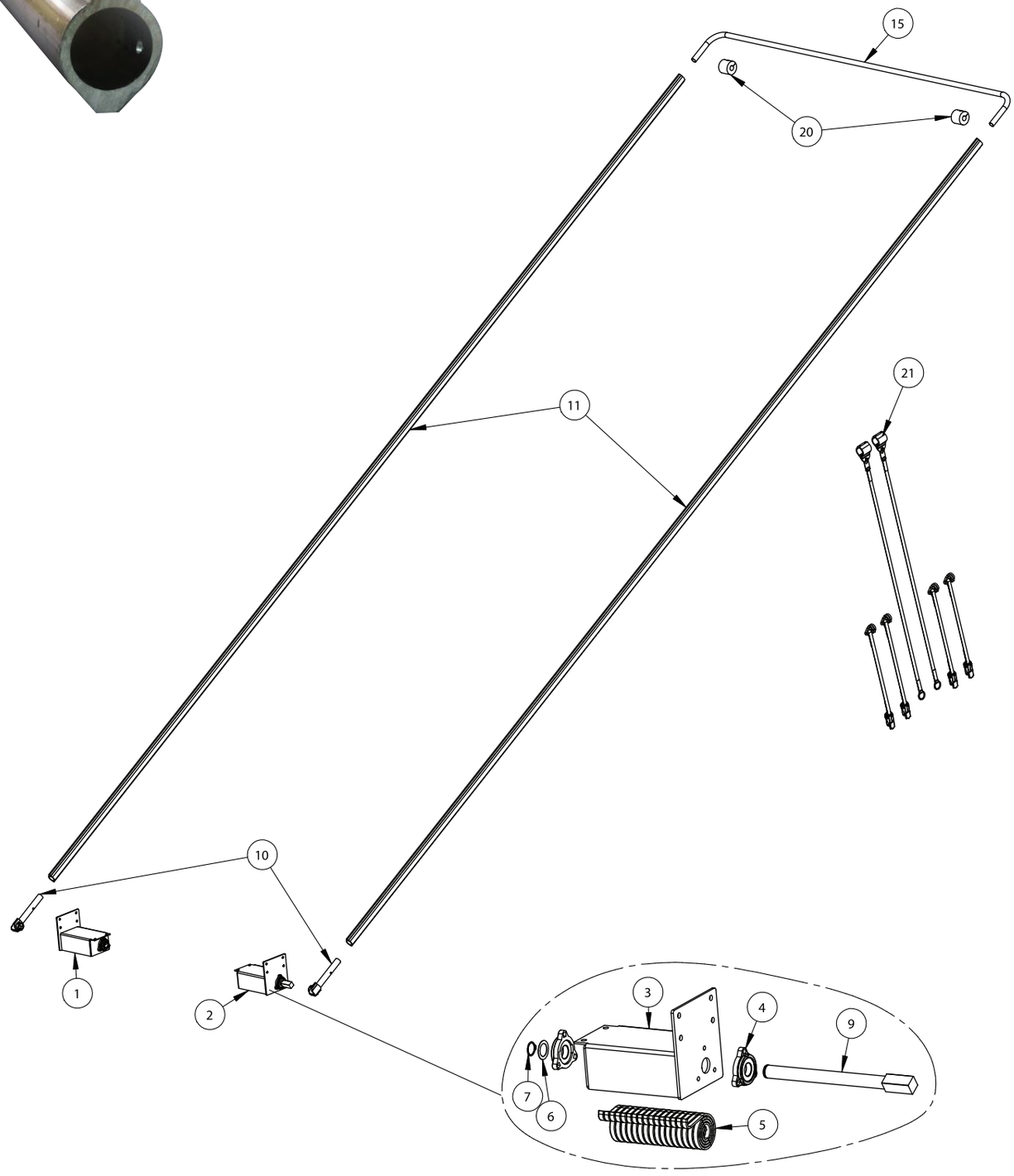

SEVERE DUTY PARTS - ONE PIECE SYSTEM

REF.	QTY	PART #	DESCRIPTION
SEVERE DUTY 1-PIECE ARM KIT			
1	1	16485-HD	16-Spring Severe Duty Spring Assembly for 1-Piece Arm; Driver Side
2	1	16486-HD	16-Spring Severe Duty Spring Assembly for 1-Piece Arm; Passenger Side
10	2	15717	Underbody Bulletproof Arm Casting
11	2	14748	24ft HD Bulletproof Arm
15	1	14522	Steel 1-Piece Cross Tube for 102" Trailers (108"C.D.)
20	2	13632	Black Rubber Bumper for Steel Cross Tube w/Bolt
21	1	16602	Arm Strap Kit for 1-Piece Severe Duty Arms
**	2	14835	Open Top Housing Support Brace
SEVERE DUTY 1-PIECE SPRING ASSEMBLY			
3	1	16467-HD	16-Spring Housing; Driver Side
3	1	16468-HD	16-Spring Housing; Passenger Side
4	2	47800	1-1/4" 3-Bolt Cast Flange Bearing
5	16	11121	Spiral Torsion Spring
6	1	11141	Stainless Steel Bushing for Pivot Pin
7	1	11142	External Retaining Ring for Pivot Pin
9	1	16490	16-Spring Shaft for 1-Piece Arm; 1-1/4" Sq Connector

**Item not shown. *Oversized items, over length shipping rates apply.

SEVERE DUTY PARTS - TWO PIECE SYSTEM

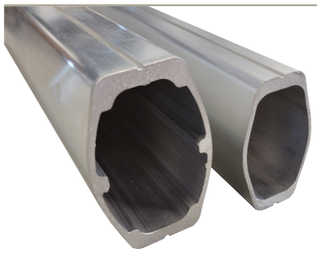

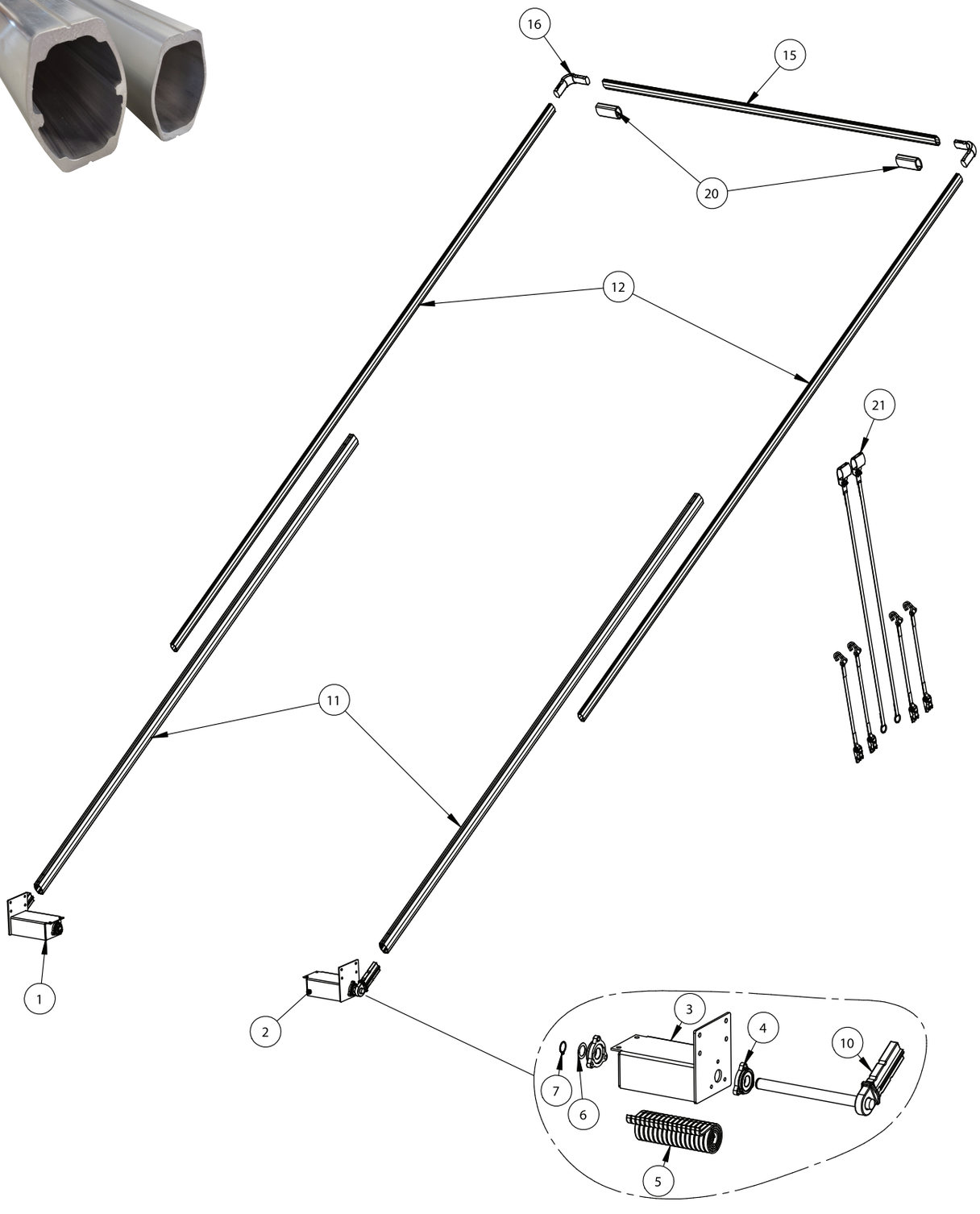

SEVERE DUTY PARTS - TWO PIECE SYSTEM

REF.	QTY	PART #	DESCRIPTION
SEVERE DUTY 2-PIECE ARM KIT			
1	1	16473	12-Spring Severe Duty Spring Assembly for 2-Piece Arm; Driver Side
1	1	16469-HD	16-Spring Severe Duty Spring Assembly for 2-Piece Arm; Driver Side
2	1	16474	12-Spring Severe Duty Spring Assembly for 2-Piece Arm; Passenger Side
2	1	16470-HD	16-Spring Severe Duty Spring Assembly for 2-Piece Arm; Passenger Side
11	2	16561	104" Severe Duty Lower Arm
11	2	16560*	160" Severe Duty Lower Arm
12	2	16555*	192" Severe Duty Lower Arm
12	2	16559*	264" Severe Duty Lower Arm
15	1	16558	103" Severe Duty Cross Tube
16	2	16557	Severe Duty Upper Corner
20	2	16556	Severe Duty Centering Flange
21	1	16599	Arm Strap Kit for 2-Piece Severe Duty Arms
**	2	14835	Open Top Support Brace
SEVERE DUTY 2-PIECE SPRING ASSEMBLY			
3	1	16471	12-Spring Housing; Driver Side
3	1	16472	12-Spring Housing; Passenger Side
3	1	16467-HD	16-Spring Housing HD; Driver Side
3	1	16468-HD	16-Spring Housing HD; Passenger Side
4	2	47800	1-1/4" 3-Bolt Cast Flange Bearing
5	12 OR 16	11121	Spiral Torsion Spring
6	1	11141	Stainless Steel Bushing
7	1	11142	External Retaining Ring
10	1	16562	12-Spring Severe Duty Lower Casting for 2-Piece Arm; Driver Side
10	1	16563	12-Spring Severe Duty Lower Casting for 2-Piece Arm; Passenger Side
10	1	16553	16-Spring Severe Duty Lower Casting for 2-Piece Arm; Driver Side
10	1	16554	16-Spring Severe Duty Lower Casting for 2-Piece Arm; Passenger Side

**Item not shown. *Oversized items, over length shipping rates apply.

Parts for Tarps

DID YOU KNOW

You've heard of "All Makes" and "One Stop Shop" before, now take advantage of Parts for Tarps from US Tarp!

THE PARTS YOU NEED

We manufacture and distribute parts for commonly used brands right here at US Tarp. No more shopping around. Find everything you need all in one place.

FASTER LEAD TIMES

Get the parts you need faster. As customers tell us, US Tarp has faster lead times than our competitors.

BETTER SERVICE

Not only will our selection and faster lead times make your ordering process more efficient: US Tarp's talented team provides phenomenal service every time.

WE'VE GOT YOU COVERED.

US Tarp® • PO Box 935 • South Haven, MI 49090

©2021 US Tarp. All rights are reserved. No part of this publication may be reproduced without prior permission.
All Manufacturers' names, numbers, symbols, and descriptions are used for reference purposes only, and it does not imply that any part listed is the product of these manufacturers.

phone: 800-249-0297
fax: 269-639-3015
email: Sales@USTarp.com

USTARP-SD-500 01/23